CC1121 High-Performance Low-Power RF Transceiver

1 Device Overview

1.1 Features

- High-Performance, Single-Chip Transceiver
  - Excellent Receiver Sensitivity:
    - –120 dBm at 1.2 kbps
    - –110 dBm at 50 kbps
  - Blocking Performance: 86 dB at 10 MHz
  - Adjacent Channel Selectivity: 60 dB
  - Very Low Phase Noise: –111 dBc/Hz at 10-kHz Offset
- Separate 128-Byte RX and TX FIFOs
- WaveMatch: Advanced Digital Signal Processing for Improved Sync Detect Performance
- Support for Seamless Integration With the CC1190 Device for Increased Range Giving up to 3-dB Improvement in Sensitivity and up to +27-dBm Output Power
- Power Supply
  - Wide Supply Voltage Range (2.0 V to 3.6 V)
  - Low Current Consumption:
    - RX: 2 mA in RX Sniff Mode
    - RX: 17-mA Peak Current in Low-Power Mode
    - RX: 22-mA Peak Current in High-Performance Mode
    - TX: 45 mA at +14 dBm
  - Power Down: 0.12 µA (0.5 µA With eWOR Timer Running)
- Programmable Output Power up to +16 dBm With 0.4-dB Step Size
- Automatic Output Power Ramping
- Configurable Data Rates: 1.2 to 200 kbps
- Supported Modulation Formats: 2-FSK, 2-GFSK, 4-FSK, 4-GFSK, MSK, OOK
- RoHS-Compliant 5-mm x 5-mm No-Lead QFN 32-Pin Package (RHB)
- Regulations – Suitable for Systems Targeting Compliance With
  - **Europe:** ETSI EN 300 220, ETSI EN 54-25
  - **US:** FCC CFR47 Part 15, FCC CFR47 Part 24
  - **Japan:** ARIB STD-T108
- Peripherals and Support Functions
  - Enhanced Wake-On-Radio Functionality for Automatic Low-Power Receive Polling
  - Includes Functions for Antenna Diversity Support
  - Support for Retransmissions
  - Support for Auto-Acknowledge of Received Packets
  - TCXO Support and Control, also in Power Modes
  - Automatic Clear Channel Assessment (CCA) for Listen-Before-Talk (LBT) Systems
  - Built-in Coding Gain Support for Increased Range and Robustness
  - Digital RSSI Measurement
  - Temperature Sensor

1.2 Applications

- Ultra-Low Power Wireless Systems With Channel Spacing Down to 50 kHz
- 169-, 315-, 433-, 868-, 915-, 920-, 950-MHz ISM/SRD Band Systems
- Wireless Metering and Wireless Smart Grid (AMR and AMI)
- IEEE 802.15.4g Systems
- Home and Building Automation
- Wireless Alarm and Security Systems
- Industrial Monitoring and Control
- Wireless Healthcare Applications
- Wireless Sensor Networks and Active RFID

An IMPORTANT NOTICE at the end of this data sheet addresses availability, warranty, changes, use in safety-critical applications, intellectual property matters and other important disclaimers. PRODUCTION DATA.

1.3 Description

The CC1121 device is a fully integrated single-chip radio transceiver designed for high performance at very low-power and low-voltage operation in cost-effective wireless systems. All filters are integrated, thus removing the need for costly external SAW and IF filters. The device is mainly intended for the ISM (Industrial, Scientific, and Medical) and SRD (Short Range Device) frequency bands at 274–320 MHz, 410–480 MHz, and 820–960 MHz.

The CC1121 device provides extensive hardware support for packet handling, data buffering, burst transmissions, clear channel assessment, link quality indication, and Wake-On-Radio. The main operating parameters of the CC1121 device can be controlled through an SPI interface. In a typical system, the CC1121 device will be used with a microcontroller and only a few external passive components.

Device Information(1)

PART NUMBER	PACKAGE	BODY SIZE
CC1121RHB	VQFN (32)	5.00 mm x 5.00 mm

(1) For more information, see Section 8, *Mechanical Packaging and Orderable Information*

1.4 Functional Diagram

Figure 1-1 shows the system block diagram of the CC1121 device.

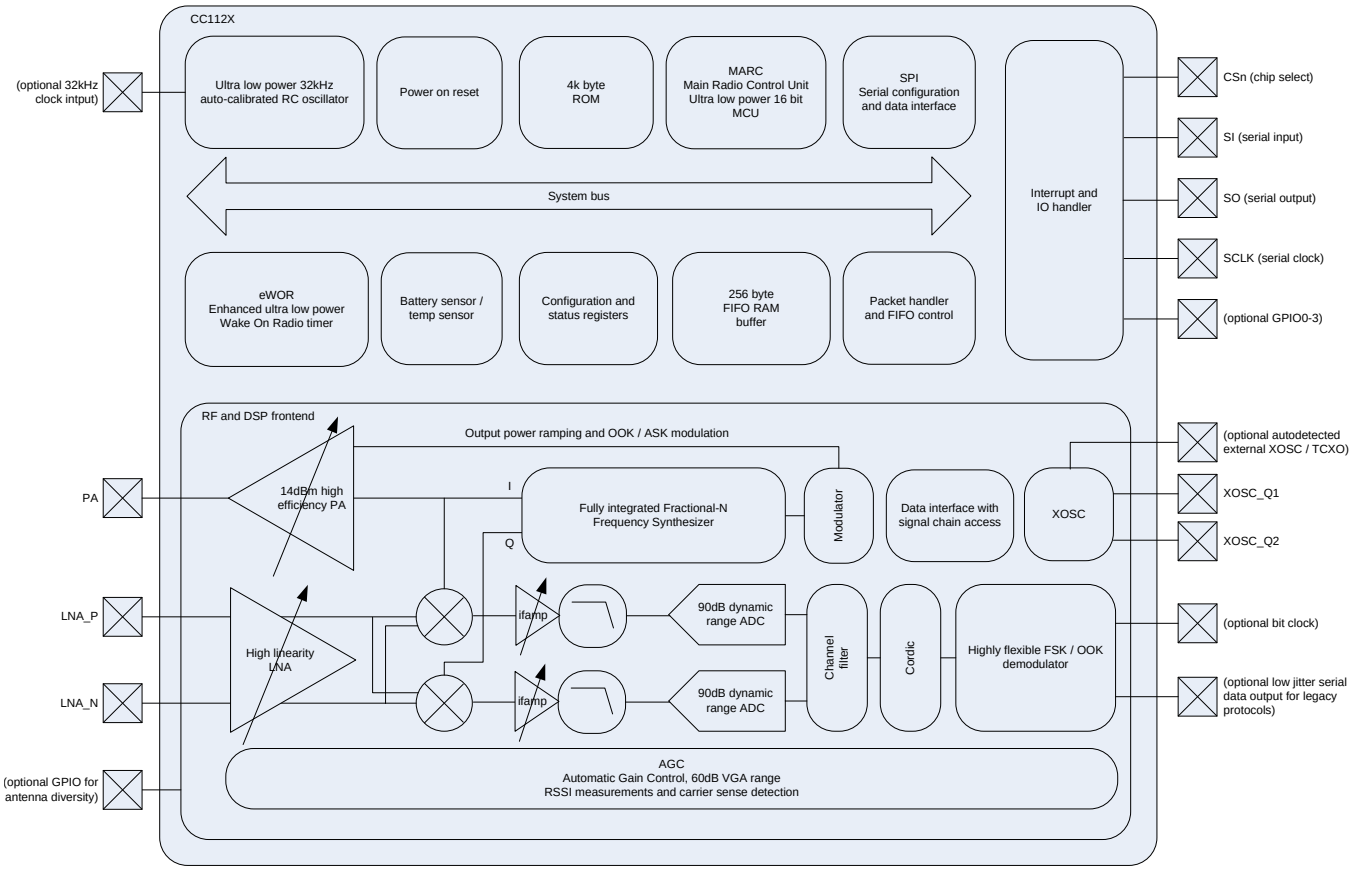

Figure 1-1. Functional Block Diagram

Copyright © 2011–2014, Texas Instruments Incorporated

Table of Contents

1 Device Overview **1**
1.1 Features 1
1.2 Applications 1
1.3 Description 2
1.4 Functional Diagram 2
2 Revision History **4**
3 Terminal Configuration and Functions **5**
3.1 Pin Diagram 5
3.2 Pin Configuration 6
4 Specifications **7**
4.1 Absolute Maximum Ratings 7
4.2 Handling Ratings 7
4.3 Recommended Operating Conditions (General Characteristics) 7
4.4 Thermal Resistance Characteristics for RHB Package 7
4.5 RF Characteristics 8
4.6 Regulatory Standards 9
4.7 Current Consumption, Static Modes 9
4.8 Current Consumption, Transmit Modes 9
4.9 Current Consumption, Receive Modes 10
4.10 Receive Parameters 11
4.11 Transmit Parameters 14
4.12 PLL Parameters 15
4.13 Wake-up and Timing 16
4.14 32-MHz Crystal Oscillator 16
4.15 32-MHz Clock Input (TCXO) 16
4.16 32-kHz Clock Input 17
4.17 32-kHz RC Oscillator 17
4.18 I/O and Reset 17
4.19 Temperature Sensor 17
4.20 Typical Characteristics 18
5 Detailed Description **20**
5.1 Block Diagram 20
5.2 Frequency Synthesizer 20
5.3 Receiver 21
5.4 Transmitter 21
5.5 Radio Control and User Interface 21
5.6 Enhanced Wake-On-Radio (eWOR) 21
5.7 Sniff Mode 22
5.8 Antenna Diversity 22
5.9 Low-Power and High-Performance Mode 22
5.10 WaveMatch 23
6 Typical Application Circuit **24**
7 Device and Documentation Support **25**
7.1 Device Support 25
7.2 Documentation Support 26
7.3 Community Resources 26
7.4 Trademarks 26
7.5 Electrostatic Discharge Caution 26
7.6 Glossary 26
8 Mechanical Packaging and Orderable Information **27**

Copyright © 2011–2014, Texas Instruments Incorporated

2 Revision History

NOTE: Page numbers for previous revisions may differ from page numbers in the current version.

This data manual revision history highlights the changes made to the SWRS111E device-specific data manual to make it an SWRS111F revision.

Changes from Revision E (July 2014) to Revision F	Page
• Added Ambient to the temperature range condition and removed Tj from Temperature range	7
• Added data to TCXO table	16

Copyright © 2011–2014, Texas Instruments Incorporated

3 Terminal Configuration and Functions

3.1 Pin Diagram

Figure 3-1 shows pin names and locations for the CC1121 device.

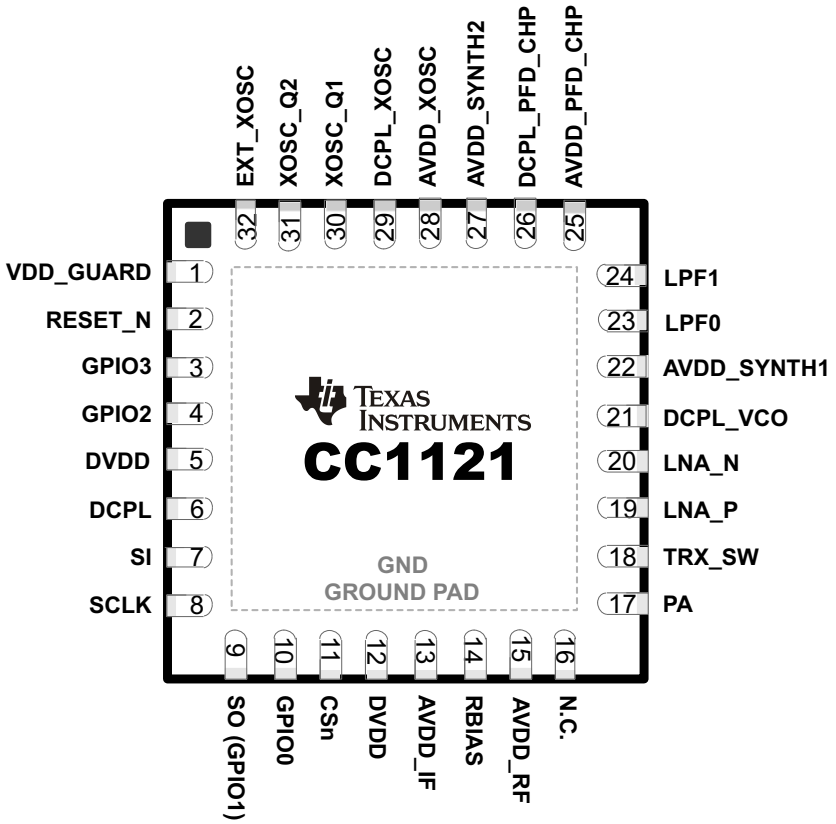

Figure 3-1. Package 5-mm × 5-mm QFN

3.2 Pin Configuration

The following table lists the pinout configuration for the CC1121 device.

PIN NO.	PIN NAME	TYPE / DIRECTION	DESCRIPTION
1	VDD_GUARD	Power	2.0–3.6 V VDD
2	RESET_N	Digital input	Asynchronous, active-low digital reset
3	GPIO3	Digital I/O	General-purpose I/O
4	GPIO2	Digital I/O	General-purpose I/O
5	DVDD	Power	2.0–3.6 V VDD to internal digital regulator
6	DCPL	Power	Digital regulator output to external decoupling capacitor
7	SI	Digital input	Serial data in
8	SCLK	Digital input	Serial data clock
9	SO(GPIO1)	Digital I/O	Serial data out (general-purpose I/O)
10	GPIO0	Digital I/O	General-purpose I/O
11	CSn	Digital Input	Active-low chip select
12	DVDD	Power	2.0–3.6 V VDD
13	AVDD_IF	Power	2.0–3.6 V VDD
14	RBIAS	Analog	External high-precision R
15	AVDD_RF	Power	2.0–3.6 V VDD
16	N.C.		Not connected
17	PA	Analog	Single-ended TX output (requires DC path to VDD)
18	TRX_SW	Analog	TX and RX switch. Connected internally to GND in TX and floating (high-impedance) in RX.
19	LNA_P	Analog	Differential RX input (requires DC path to GND)
20	LNA_N	Analog	Differential RX input (requires DC path to GND)
21	DCPL_VCO	Power	Pin for external decoupling of VCO supply regulator
22	AVDD_SYNTH1	Power	2.0–3.6 V VDD
23	LPF0	Analog	External loop filter components
24	LPF1		External loop filter components
25	AVDD_PFD_CHP	Power	2.0–3.6 V VDD
26	DCPL_PFD_CHP	Power	Pin for external decoupling of PFD and CHP regulator
27	AVDD_SYNTH2	Power	2.0–3.6 V VDD
28	AVDD_XOSC	Power	2.0–3.6 V VDD
29	DCPL_XOSC	Power	Pin for external decoupling of XOSC supply regulator
30	XOSC_Q1	Analog	Crystal oscillator pin 1 (must be grounded if a TCXO or other external clock connected to EXT_XOSC is used)
31	XOSC_Q2	Analog	Crystal oscillator pin 2 (must be left floating if a TCXO or other external clock connected to EXT_XOSC is used)
32	EXT_XOSC	Digital input	Pin for external XOSC input (must be grounded if a regular XOSC connected to XOSC_Q1 and XOSC_Q2 is used)
–	GND	Ground pad	The ground pad must be connected to a solid ground plane.

Copyright © 2011–2014, Texas Instruments Incorporated

4 Specifications

All measurements performed on CC1120EM_868_915 rev.1.0.1, CC1120EM_955 rev.1.2.1, CC1120EM_420_470 rev.1.0.1, or CC1120EM_169 rev.1.2.

4.1 Absolute Maximum Ratings(1)(2)

over operating free-air temperature range (unless otherwise noted)

PARAMETER	MIN	MAX	UNIT	CONDITION
Supply voltage (VDD, AVDD_x)	–0.3	3.9	V	All supply pins must have the same voltage
Input RF level		+10	dBm	
Voltage on any digital pin	–0.3	VDD+0.3	V	max 3.9 V
Voltage on analog pins (including DCPL pins)	–0.3	2.0	V	

(1) Stresses beyond those listed under absolute maximum ratings may cause permanent damage to the device. These are stress ratings only, and functional operation of the device at these or any other conditions beyond those indicated under general characteristics is not implied. Exposure to absolute-maximum-rated conditions for extended periods may affect device reliability.
(2) All voltage values are with respect to V_{SS}, unless otherwise noted.

4.2 Handling Ratings

				MIN	MAX	UNIT
T_{stg}	Storage temperature range			–40	125	°C
V_{ESD}	Electrostatic discharge (ESD) performance:	Human body model (HBM), per ANSI/ESDA/JEDEC JS001(1)		–2	2	kV
		Charged device model (CDM), per JESD22-C101(2)	All pins	–500	500	V

(1) JEDEC document JEP155 states that 500-V HBM allows safe manufacturing with a standard ESD control process.
(2) JEDEC document JEP157 states that 250-V HBM allows safe manufacturing with a standard ESD control process.

4.3 Recommended Operating Conditions (General Characteristics)

PARAMETER	MIN	TYP	MAX	UNIT	CONDITION
Voltage supply range	2.0		3.6	V	All supply pins must have the same voltage
Voltage on digital inputs	0		VDD	V	
Temperature range	–40		85	°C	Ambient

4.4 Thermal Resistance Characteristics for RHB Package

		°C/W(1)	AIR FLOW (m/s)(2)
$R\theta_{JC}$	Junction-to-case (top)	21.1	0.00
$R\theta_{JB}$	Junction-to-board	5.3	0.00
$R\theta_{JA}$	Junction-to-free air	31.3	0.00
Psi_{JT}	Junction-to-package top	0.2	0.00
Psi_{JB}	Junction-to-board	5.3	0.00
$R\theta_{JC}$	Junction-to-case (bottom)	0.8	0.00

(1) These values are based on a JEDEC-defined 2S2P system (with the exception of the Theta JC [$R\Theta_{JC}$] value, which is based on a JEDEC-defined 1S0P system) and will change based on environment as well as application. For more information, see these EIA/JEDEC standards:
- JESD51-2, *Integrated Circuits Thermal Test Method Environmental Conditions - Natural Convection (Still Air)*
- JESD51-3, *Low Effective Thermal Conductivity Test Board for Leaded Surface Mount Packages*
- JESD51-7, *High Effective Thermal Conductivity Test Board for Leaded Surface Mount Packages*
- JESD51-9, *Test Boards for Area Array Surface Mount Package Thermal Measurements*

Power dissipation of 40 mW and an ambient temperature of 25ºC is assumed.
(2) m/s = meters per second

Copyright © 2011–2014, Texas Instruments Incorporated

4.5 RF Characteristics

PARAMETER	MIN	TYP	MAX	UNIT	CONDITION
Frequency bands	820		960	MHz	
	410		480	MHz	
	(273.3)		(320)	MHz	For more information, see application note AN115, *Using the CC112x/CC1175 at 274 to 320 MHz*.
	164		192	MHz	
	(205)		(240)	MHz	Please contact TI for more information about the use of these frequency bands.
	(136.7)		(160)	MHz	
Frequency resolution		30		Hz	In 820- to 950-MHz band
		15		Hz	In 410- to 480-MHz band
		6		Hz	In 164- to 192-MHz band
Data rate	0		200	kbps	Packet mode
	0		100	kbps	Transparent mode
Data rate step size		1e-4		bps	

Copyright © 2011–2014, Texas Instruments Incorporated

4.6 Regulatory Standards

PERFORMANCE MODE	FREQUENCY BAND	SUITABLE FOR COMPLIANCE WITH	COMMENTS
High-performance mode	820–960 MHz	ARIB T-108 ARIB T-96 ETSI EN 300 220, receiver category 2 ETSI EN 54-25 FCC PART 24 Submask D FCC Part 15.247 FCC Part 15.249	Performance also suitable for systems targeting maximum allowed output power in the respective bands, using a range extender such as the CC1190 device
	410–480 MHz	ETSI EN 300 220, category 2	Performance also suitable for systems targeting maximum allowed output power in the respective bands, using a range extender
	164–192 MHz	ETSI EN 300 220, category 2	Performance also suitable for systems targeting maximum allowed output power in the respective bands, using a range extender
Low-power mode	820–960 MHz	ETSI EN 300 220, category 2 FCC Part 15.247 FCC Part 15.249	
	410–480 MHz	ETSI EN 300 220, category 2	
	164–192 MHz	ETSI EN 300 220, category 2	

4.7 Current Consumption, Static Modes

T_A = 25°C, VDD = 3.0 V if nothing else stated

PARAMETER	MIN	TYP	MAX	UNIT	CONDITION
Power down with retention		0.12	1	µA	
		0.5		µA	Low-power RC oscillator running
XOFF mode		170		µA	Crystal oscillator / TCXO disabled
IDLE mode		1.3		mA	Clock running, system waiting with no radio activity

4.8 Current Consumption, Transmit Modes

4.8.1 950-MHz Band (High-Performance Mode)

T_A = 25°C, VDD = 3.0 V if nothing else stated

PARAMETER	MIN	TYP	MAX	UNIT	CONDITION
TX current consumption +10 dBm		37		mA	
TX current consumption 0 dBm		26		mA	

4.8.2 868-, 915-, and 920-MHz Bands (High-Performance Mode)

T_A = 25°C, VDD = 3.0 V if nothing else stated

PARAMETER	MIN	TYP	MAX	UNIT	CONDITION
TX current consumption +14 dBm		45		mA	
TX current consumption +10 dBm		34		mA	

Copyright © 2011–2014, Texas Instruments Incorporated

4.8.3 434-MHz Band (High-Performance Mode)

T_A = 25°C, VDD = 3.0 V if nothing else stated

PARAMETER	MIN	TYP	MAX	UNIT	CONDITION
TX current consumption +15 dBm		50		mA	
TX current consumption +14 dBm		45		mA	
TX current consumption +10 dBm		34		mA	

4.8.4 169-MHz Band (High-Performance Mode)

T_A = 25°C, VDD = 3.0 V if nothing else stated

PARAMETER	MIN	TYP	MAX	UNIT	CONDITION
TX current consumption +15 dBm		54		mA	
TX current consumption +14 dBm		49		mA	
TX current consumption +10 dBm		41		mA	

4.8.5 Low-Power Mode

T_A = 25°C, VDD = 3.0 V, f_c = 869.5 MHz if nothing else stated

PARAMETER	MIN	TYP	MAX	UNIT	CONDITION
TX current consumption +10 dBm		32		mA	

4.9 Current Consumption, Receive Modes

4.9.1 High-Performance Mode

T_A = 25°C, VDD = 3.0 V, f_c = 869.5 MHz if nothing else stated

PARAMETER	MIN	TYP	MAX	UNIT	CONDITION
RX wait for sync 1.2 kbps, 4-byte preamble		2		mA	Using RX sniff mode, where the receiver wakes up at regular intervals to look for an incoming packet
RX peak current 433-, 868-, 915-, 920-, and 950-MHz bands 169-MHz band		 22 23		 mA mA	Peak current consumption during packet reception at the sensitivity threshold
Average current consumption Check for data packet every 1 second using Wake-on-Radio		15		µA	50 kbps, 5-byte preamble, 40-kHz RC oscillator used as sleep timer

4.9.2 Low-Power Mode

T_A = 25°C, VDD = 3.0 V, f_c = 869.5 MHz if nothing else stated

PARAMETER	MIN	TYP	MAX	UNIT	CONDITION
RX peak current low-power RX mode 1.2 kbps		17		mA	Peak current consumption during packet reception at the sensitivity level

Copyright © 2011–2014, Texas Instruments Incorporated

4.10 Receive Parameters

All RX measurements made at the antenna connector, to a bit error rate (BER) limit of 1%.

4.10.1 General Receive Parameters (High-Performance Mode)

T_A = 25°C, VDD = 3.0 V, f_c = 869.5 MHz if nothing else stated

PARAMETER	MIN	TYP	MAX	UNIT	CONDITION
Saturation		+10		dBm	
Digital channel filter programmable bandwidth	41.7		200	kHz	
IIP3, normal mode		–14		dBm	At maximum gain
IIP3, high linearity mode		–8		dBm	Using 6-dB gain reduction in front end
Data rate offset tolerance		±12		%	With carrier sense detection enabled and assuming 4-byte preamble
		±0.2		%	With carrier sense detection disabled
Spurious emissions					Radiated emissions measured according to ETSI EN 300 220, f_c = 869.5 MHz
1–13 GHz (VCO leakage at 3.5 GHz)		–56		dBm	
30 MHz to 1 GHz		< –57		dBm	
Optimum source impedance					(Differential or single-ended RX configurations)
868-, 915-, and 920-MHz bands		60 + j60 / 30 + j30		Ω	
433-MHz band		100 + j60 / 50+ j30		Ω	
169-MHz band		140 + j40 / 70 + j20		Ω	

4.10.2 RX Performance in 950-MHz Band (High-Performance Mode)

T_A = 25°C, VDD = 3.0 V if nothing else stated

PARAMETER	MIN	TYP	Max	UNIT	CONDITION
Sensitivity Note: Sensitivity can be improved if the TX and RX matching networks are separated.		–114		dBm	1.2 kbps, DEV=20 kHz CHF=50 kHz (1)
		–107		dBm	50 kbps 2GFSK, DEV=25 kHz, CHF=100 kHz (1)
		–100		dBm	200 kbps, DEV=83 kHz (outer symbols), CHF=200 kHz, 4GFSK (2)
Blocking and selectivity 1.2-kbps 2FSK, 50-kHz channel separation, 20-kHz deviation, 50-kHz channel filter		47		dB	± 50 kHz (adjacent channel)
		48		dB	+ 100 kHz (alternate channel)
		69		dB	± 1 MHz
		71		dB	± 2 MHz
		78		dB	± 10 MHz
Blocking and selectivity 50-kbps 2GFSK, 200-kHz channel separation, 25-kHz deviation, 100-kHz channel filter (Same modulation format as 802.15.4g Mandatory Mode)		43		dB	± 200 kHz (adjacent channel)
		51		dB	± 400 kHz (alternate channel)
		62		dB	± 1 MHz
		65		dB	± 2 MHz
		71		dB	± 10 MHz
Blocking and selectivity 200-kbps 4GFSK, 83-kHz deviation (outer symbols), 200-kHz channel filter, zero IF		37		dB	± 200 kHz (adjacent channel)
		44		dB	± 400 kHz (alternate channel)
		55		dB	± 1 MHz
		58		dB	± 2 MHz
		64		dB	± 10 MHz

(1) DEV is short for deviation, CHF is short for Channel Filter Bandwidth
(2) BT=0.5 is used in all GFSK measurements

4.10.3 RX Performance in 868-, 915-, and 920-MHz Bands (High-Performance Mode)

T_A = 25°C, VDD = 3.0 V if nothing else stated

PARAMETER	MIN	TYP	MAX	UNIT	CONDITION
Sensitivity		–120		dBm	1.2 kbps, DEV=10 kHz CHF=41.7 kHz (1), using increased RX filtering
		–117		dBm	1.2 kbps, DEV=20 kHz CHF=50 kHz (1)
		–114		dBm	4.8 kbps OOK
		–110		dBm	38.4 kbps, DEV=20 kHz CHF=100 kHz (1)
		–110		dBm	50 kbps 2GFSK, DEV=25 kHz, CHF=100 kHz (1)
		–103		dBm	200 kbps, DEV=83 kHz (outer symbols), CHF=200 kHz (1), 4GFSK
Blocking and selectivity 1.2-kbps 2FSK, 50-kHz channel separation, 20-kHz deviation, 50-kHz channel filter		48		dB	± 50 kHz (adjacent channel)
		48		dB	± 100 kHz (alternate channel)
		69		dB	± 1 MHz
		74		dB	± 2 MHz
		81		dB	± 10 MHz
Blocking and selectivity 38.4-kbps 2GFSK, 100-kHz channel separation, 20-kHz deviation, 100-kHz channel filter		42		dB	+ 100 kHz (adjacent channel)
		43		dB	± 200 kHz (alternate channel)
		62		dB	± 1 MHz
		66		dB	± 2 MHz
		74		dB	± 10 MHz
Blocking and selectivity 50-kbps 2GFSK, 200-kHz channel separation, 25-kHz deviation, 100-kHz channel filter (Same modulation format as 802.15.4g Mandatory Mode)		43		dB	± 200 kHz (adjacent channel)
		50		dB	± 400 kHz (alternate channel)
		61		dB	± 1 MHz
		65		dB	± 2 MHz
		74		dB	± 10 MHz
Blocking and selectivity 200-kbps 4GFSK, 83-kHz deviation (outer symbols), 200-kHz channel filter, zero IF		36		dB	± 200 kHz (adjacent channel)
		44		dB	± 400 kHz (alternate channel)
		55		dB	± 1 MHz
		59		dB	± 2 MHz
		67		dB	± 10 MHz

(1) DEV is short for deviation, CHF is short for Channel Filter Bandwidth

4.10.4 RX Performance in 434-MHz Band (High-Performance Mode)

T_A = 25°C, VDD = 3.0 V if nothing else stated

PARAMETER	MIN	TYP	MAX	UNIT	CONDITION
Sensitivity		–109		dBm	50 kbps 2GFSK, DEV=25 kHz, CHF=100 kHz (1)
		–116		dBm	1.2 kbps, DEV=20 kHz CHF=50 kHz (1)
Blocking and selectivity 1.2-kbps 2FSK, 50-kHz channel separation, 20-kHz deviation, 50-kHz channel filter		54		dB	± 50 kHz (adjacent channel)
		54		dB	+ 100 kHz (alternate channel)
		74		dB	± 1 MHz
		78		dB	± 2 MHz
		86		dB	± 10 MHz
Blocking and selectivity 38.4-kbps 2GFSK, 100-kHz channel separation, 20-kHz deviation, 100-kHz channel filter		47		dB	+ 100 kHz (adjacent channel)
		50		dB	± 200 kHz (alternate channel)
		67		dB	± 1 MHz
		71		dB	± 2 MHz
		78		dB	± 10 MHz

(1) DEV is short for deviation, CHF is short for Channel Filter Bandwidth

Copyright © 2011–2014, Texas Instruments Incorporated

4.10.5 RX Performance in 169-MHz Band (High-Performance Mode)

T_A = 25°C, VDD = 3.0 V if nothing else stated

PARAMETER	MIN	TYP	MAX	UNIT	CONDITION
Sensitivity		–117		dBm	1.2 kbps, DEV=20 kHz CHF=50 kHz (1)
Blocking and selectivity 1.2-kbps 2FSK, 50-kHz channel separation, 20-kHz deviation, 50-kHz channel filter		60		dB	± 50 kHz (adjacent channel)
		60		dB	+ 100 kHz (alternate channel)
		76		dB	± 1 MHz
		77		dB	± 2 MHz
		83		dB	± 10 MHz

(1) DEV is short for deviation, CHF is short for Channel Filter Bandwidth

4.10.6 RX Performance in Low-Power Mode

T_A = 25°C, VDD = 3.0 V, f_c = 869.5 MHz if nothing else stated

PARAMETER	MIN	TYP	MAX	UNIT	CONDITION
Sensitivity		–99		dBm	38.4 kbps, DEV=50 kHz CHF=100 kHz (1)
		–99		dBm	50 kbps 2GFSK, DEV=25 kHz, CHF=100 kHz (1)
Blocking and selectivity 1.2-kbps 2FSK, 50-kHz channel separation, 20-kHz deviation, 50-kHz channel filter		43		dB	± 50 kHz (adjacent channel)
		45		dB	+ 100 kHz (alternate channel)
		71		dB	± 1 MHz
		74		dB	± 2 MHz
		75		dB	± 10 MHz
Blocking and selectivity 38.4-kbps 2GFSK, 100-kHz channel separation, 20-kHz deviation, 100-kHz channel filter		37		dB	+ 100 kHz (adjacent channel)
		43		dB	+ 200 kHz (alternate channel)
		58		dB	± 1 MHz
		62		dB	± 2 MHz
		64		dB	+ 10 MHz
Blocking and selectivity 50-kbps 2GFSK, 200-kHz channel separation, 25-kHz deviation, 100-kHz channel filter (Same modulation format as 802.15.4g Mandatory Mode)		43		dB	+ 200 kHz (adjacent channel)
		52		dB	+ 400 kHz (alternate channel)
		60		dB	± 1 MHz
		64		dB	± 2 MHz
		65		dB	± 10 MHz
Saturation		+10		dBm	

(1) DEV is short for deviation, CHF is short for Channel Filter Bandwidth

Copyright © 2011–2014, Texas Instruments Incorporated

4.11 Transmit Parameters

T_A = 25°C, VDD = 3.0 V, f_c = 869.5 MHz if nothing else stated

PARAMETER	MIN	TYP	MAX	UNIT	CONDITION
Max output power		+12		dBm	At 950 MHz
		+14		dBm	At 915- and 920-MHz
		+15		dBm	At 915- and 920-MHz with VDD = 3.6 V
		+15		dBm	At 868 MHz
		+16		dBm	At 868 MHz with VDD = 3.6 V
		+15		dBm	At 433 MHz
		+16		dBm	At 433 MHz with VDD = 3.6 V
		+15		dBm	At 169 MHz
		+16		dBm	At 169 MHz with VDD = 3.6 V
Min output power		–11		dBm	Within fine step size range
		–40		dBm	Within coarse step size range
Output power step size		0.4		dB	Within fine step size range
Adjacent channel power		–75		dBc	4-GFSK 9.6 kbps in 12.5-kHz channel, measured in 100-Hz bandwidth at 434 MHz (FCC Part 90 Mask D compliant)
		–58		dBc	4-GFSK 9.6 kbps in 12.5-kHz channel, measured in 8.75-kHz bandwidth (ETSI 300 220 compliant)
		–61		dBc	2-GFSK 2.4 kbps in 12.5-kHz channel, 1.2-kHz deviation
Spurious emissions (not including harmonics)		<–60		dBm	
Harmonics					Transmission at +14 dBm (or maximum allowed in applicable band where this is less than +14 dBm) using TI reference design. Emissions measured according to ARIB T-96 in 950-MHz band, ETSI EN 300 220 in 169-, 433-, and 868-MHz bands and FCC Part 15.247 in 450- and 915-MHz band Fourth harmonic in 915-MHz band will require extra filtering to meet FCC requirements if transmitting for long intervals (>50-ms periods).
Second Harm, 169 MHz		–39		dBm	
Third Harm, 169 MHz		–58		dBm	
Second Harm, 433 MHz		–56		dBm	
Third Harm, 433 MHz		–51		dBm	
Second Harm, 450 MHz		–60		dBm	
Third Harm, 450 MHz		–45		dBm	
Second Harm, 868 MHz		–40		dBm	
Third Harm, 868 MHz		–42		dBm	
Second Harm, 915 MHz		56		dBuV/m	
Third Harm, 915 MHz		52		dBuV/m	
Fourth Harm, 915 MHz		60		dBuV/m	
Second Harm, 950 MHz		–58		dBm	
Third Harm, 950 MHz		–42		dBm	
Optimum load					
Impedance 868-, 915-, and 920-MHz bands		35 + j35		Ω	
433-MHz band		55 + j25		Ω	
169-MHz band		80 + j0		Ω	

Copyright © 2011–2014, Texas Instruments Incorporated

4.12 PLL Parameters

4.12.1 High-Performance Mode

T_A = 25°C, VDD = 3.0 V, f_c = 869.5 MHz if nothing else stated

PARAMETER	MIN	TYP	MAX	UNIT	CONDITION
Phase noise in 950-MHz band		–99		dBc/Hz	± 10 kHz offset
		–99		dBc/Hz	± 100 kHz offset
		–123		dBc/Hz	± 1 MHz offset
Phase noise in 868-, 915-, and 920-MHz bands		–99		dBc/Hz	± 10 kHz offset
		–100		dBc/Hz	± 100 kHz offset
		–122		dBc/Hz	± 1 MHz offset
Phase noise in 433-MHz band		–106		dBc/Hz	± 10 kHz offset
		–107		dBc/Hz	± 100 kHz offset
		–127		dBc/Hz	± 1 MHz offset
Phase noise in 169-MHz band		–111		dBc/Hz	± 10 kHz offset
		–116		dBc/Hz	± 100 kHz offset
		–135		dBc/Hz	± 1 MHz offset

4.12.2 Low-Power Mode

T_A = 25°C, VDD = 3.0 V, f_c = 869.5 MHz if nothing else stated

PARAMETER	MIN	TYP	MAX	UNIT	CONDITION
Phase noise in 950-MHz band		–90		dBc/Hz	± 10 kHz offset
		–92		dBc/Hz	± 100 kHz offset
		–124		dBc/Hz	± 1 MHz offset
Phase noise in 868- and 915-MHz bands		–95		dBc/Hz	± 10 kHz offset
		–95		dBc/Hz	± 100 kHz offset
		–124		dBc/Hz	± 1 MHz offset
Phase noise in 433-MHz band		–98		dBc/Hz	± 10 kHz offset
		–102		dBc/Hz	± 100 kHz offset
		–129		dBc/Hz	± 1 MHz offset
Phase noise in 169-MHz band		–106		dBc/Hz	± 10 kHz offset
		–110		dBc/Hz	± 100 kHz offset
		–136		dBc/Hz	± 1 MHz offset

Copyright © 2011–2014, Texas Instruments Incorporated

4.13 Wake-up and Timing

T_A = 25°C, VDD = 3.0 V, f_c = 869.5 MHz if nothing else stated

PARAMETER	MIN	TYP	MAX	UNIT	CONDITION
Powerdown to IDLE		0.4		ms	Depends on crystal
IDLE to RX/TX		166		µs	Calibration disabled
		461		µs	Calibration enabled
RX/TX turnaround		50		µs	
RX/TX to IDLE time		296		µs	Calibrate when leaving RX/TX enabled
		0		µs	Calibrate when leaving RX/TX disabled
Frequency synthesizer calibration		391		µs	When using SCAL strobe
Minimum required number of preamble bytes		0.5		bytes	Required for RF front-end gain settling only. Digital demodulation does not require preamble for settling.
Time from start RX until valid RSSI Including gain settling (function of channel bandwidth). Programmable for trade-off between speed and accuracy		0.3		ms	200-kHz channels

4.14 32-MHz Crystal Oscillator

T_A = 25°C, VDD = 3.0 V if nothing else stated

PARAMETER	MIN	TYP	MAX	UNIT	CONDITION
Crystal frequency	32		33.6	MHz	It is expected that there will be degraded sensitivity at multiples of XOSC/2 in RX, and an increase in spurious emissions when the RF channel is close to multiples of XOSC in TX. We recommend that the RF channel is kept RX_BW/2 away from XOSC/2 in RX, and that the level of spurious emissions be evaluated if the RF channel is closer than 1 MHz to multiples of XOSC in TX.
Load capacitance (C_L)		10		pF	
ESR			60	Ω	Simulated over operating conditions
Start-up time		0.4		ms	Depends on crystal

4.15 32-MHz Clock Input (TCXO)

T_A = 25°C, VDD = 3.0 V if nothing else stated

PARAMETER	MIN	TYP	MAX	UNIT	CONDITION
Clock frequency	32		33.6	MHz	
TCXO with CMOS output					TCXO with CMOS output directly coupled to pin EXT_OSC
High input voltage	1.4		VDD	V	
Low input voltage	0		0.6	V	
Rise / Fall time			2	ns	
Clipped sine output Clock input amplitude (peak-to-peak)	0.8		1.5	V	TCXO clipped sine output connected to pin EXT_OSC through series capacitor

Copyright © 2011–2014, Texas Instruments Incorporated

4.16 32-kHz Clock Input

T_A = 25°C, VDD = 3.0 V if nothing else stated

PARAMETER	MIN	TYP	MAX	UNIT	CONDITION
Clock frequency		32		kHz	
32-kHz clock input pin input high voltage	0.8×VDD			V	
32-kHz clock input pin input low voltage			0.2×VDD	V	

4.17 32-kHz RC Oscillator

T_A = 25°C, VDD = 3.0 V if nothing else stated

PARAMETER	MIN	TYP	MAX	UNIT	CONDITION
Frequency		32		kHz	After calibration
Frequency accuracy after calibration		±0.1		%	Relative to frequency reference (that is, 32-MHz crystal or TCXO)
Initial calibration time		1.6		ms	

4.18 I/O and Reset

T_A = 25°C, VDD = 3.0 V if nothing else stated

PARAMETER	MIN	TYP	MAX	UNIT	CONDITION
Logic input high voltage	0.8×VDD			V	
Logic input low voltage			0.2×VDD	V	
Logic output high voltage	0.8×VDD			V	At 4-mA output load or less
Logic output low voltage			0.2×VDD	V	
Power-on reset threshold		1.3		V	Voltage on DVDD pin

4.19 Temperature Sensor

T_A = 25°C, VDD = 3.0 V if nothing else stated

PARAMETER	MIN	TYP	MAX	UNIT	CONDITION
Temperature sensor range	–40		85	°C	
Temperature coefficient		2.66		mV / °C	Change in sensor output voltage versus change in temperature
Typical output voltage		794		mV	Typical sensor output voltage at T_A = 25°C, VDD = 3.0 V
VDD coefficient		1.17		mV / V	Change in sensor output voltage versus change in VDD

The CC1121 device can be configured to provide a voltage proportional to temperature on GPIO1. The temperature can be estimated by measuring this voltage (See Section 4.19, *Temperature Sensor*). For more information, see the temperature sensor design note (SWRA415).

4.20 Typical Characteristics

T_A = 25°C, VDD = 3.0 V, f_c = 869.5 MHz if nothing else stated.

All measurements performed on CC1120EM_868_915 rev.1.0.1, CC1120EM_955 rev.1.2.1, CC1120EM_420_470 rev.1.0.1 or CC1120EM_169 rev.1.2.

Figure 4-6 was measured at the 50-Ω antenna connector.

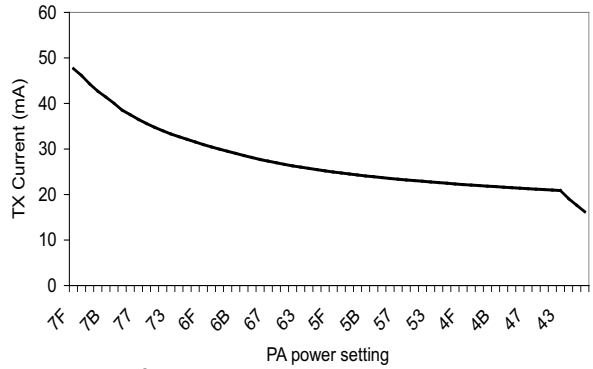

Figure 4-1. TX Current at 868 MHz vs PA Power Setting

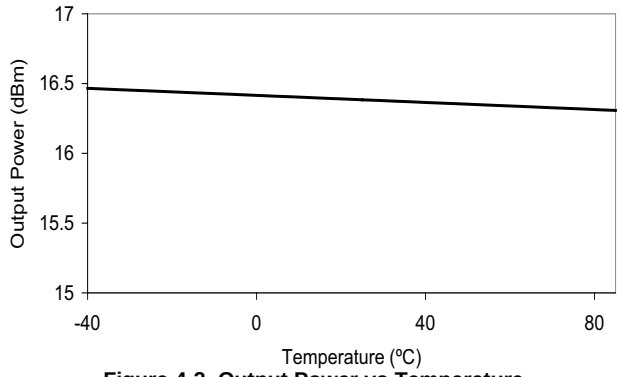

Figure 4-2. Output Power vs Temperature Max Setting, 170 MHz, 3.6 V

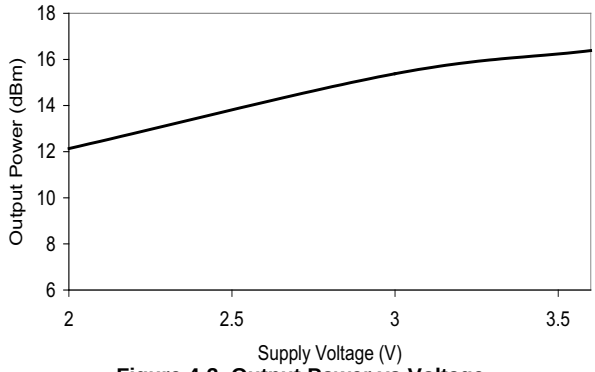

Figure 4-3. Output Power vs Voltage Max Setting, 170 MHz

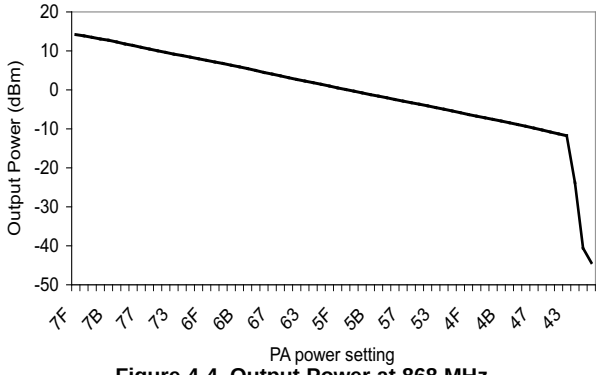

Figure 4-4. Output Power at 868 MHz vs PA Power Setting

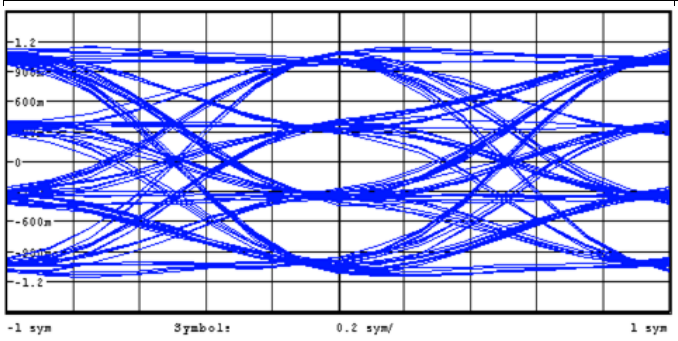

200 kbps, DEV = 83 kHz (Outer Symbols), 4GFSK
Figure 4-5. Eye Diagram

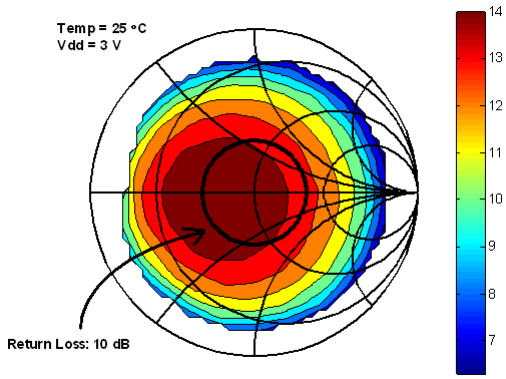

Figure 4-6. Output Power vs Load Impedance (+14-dBm Setting)

Copyright © 2011–2014, Texas Instruments Incorporated

Typical Characteristics *(continued)*

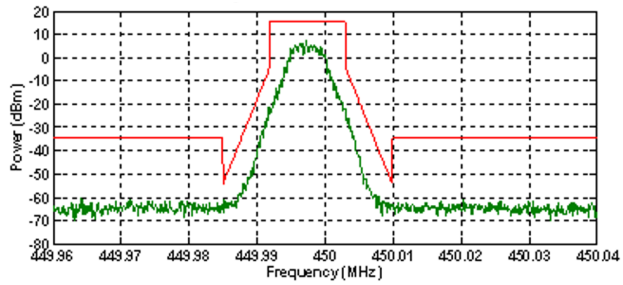

9.6 kbps in 12.5-kHz Channel
Figure 4-7. FCC Part 90 Mask D

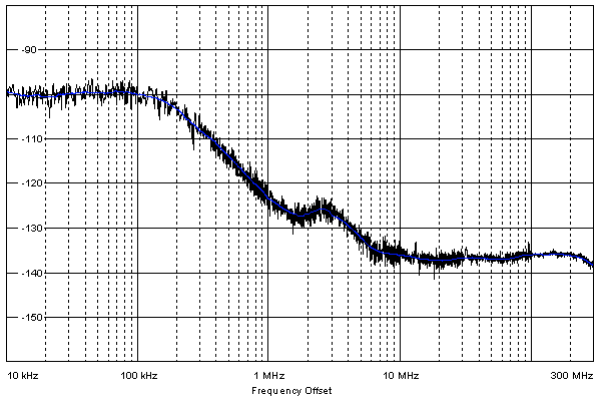

Figure 4-8. Phase Noise in 868-MHz Band

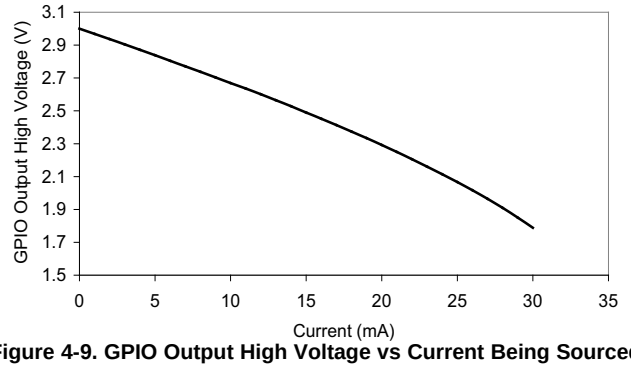

Figure 4-9. GPIO Output High Voltage vs Current Being Sourced

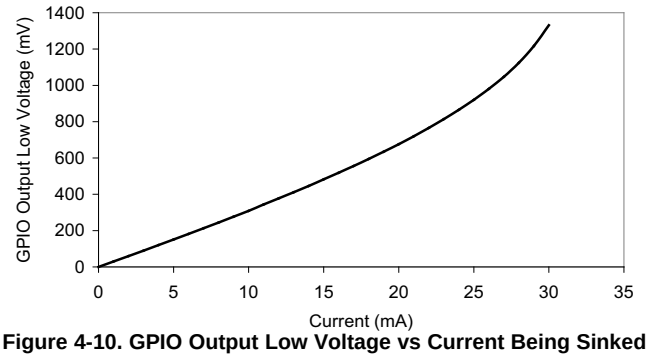

Figure 4-10. GPIO Output Low Voltage vs Current Being Sinked

5 Detailed Description

5.1 Block Diagram

Figure 5-1 shows the system block diagram of the CC1121 device.

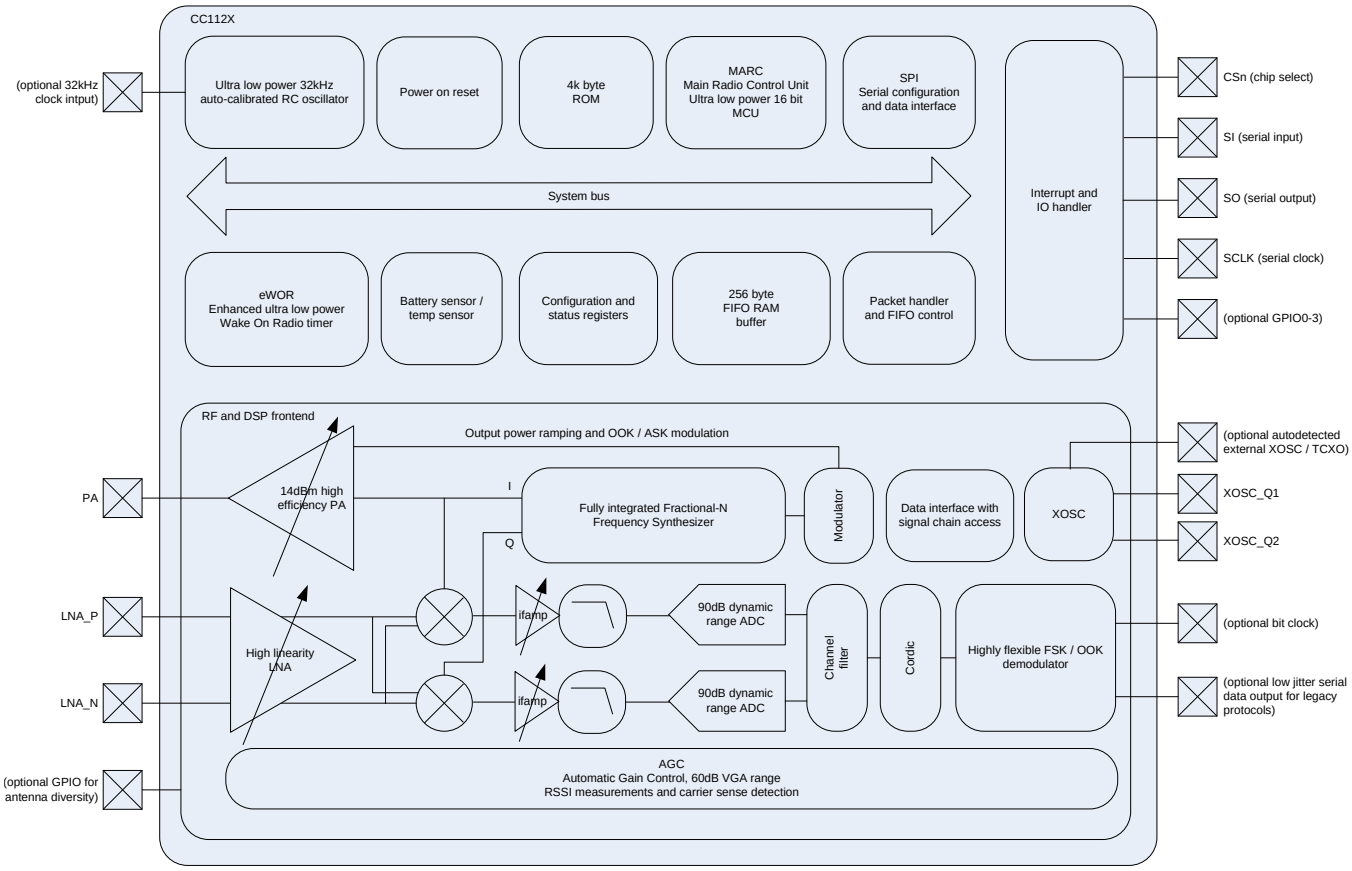

Figure 5-1. System Block Diagram

5.2 Frequency Synthesizer

At the center of the CC1121 device there is a fully integrated, fractional-N, ultra-high-performance frequency synthesizer. The frequency synthesizer is designed for excellent phase noise performance, providing very high selectivity and blocking performance. The system is designed to comply with the most stringent regulatory spectral masks at maximum transmit power.

Either a crystal can be connected to XOSC_Q1 and XOSC_Q2, or a TCXO can be connected to the EXT_XOSC input. The oscillator generates the reference frequency for the synthesizer, as well as clocks for the analog-to-digital converter (ADC) and the digital part. To reduce system cost, CC1121 device has high-accuracy frequency estimation and compensation registers to measure and compensate for crystal inaccuracies. This compensation enables the use of lower cost crystals. If a TCXO is used, the CC1121 device automatically turns on and off the TCXO when needed to support low-power modes and Wake-On-Radio operation.

Copyright © 2011–2014, Texas Instruments Incorporated

5.3 Receiver

The CC1121 device features a highly flexible receiver. The received RF signal is amplified by the low-noise amplifier (LNA) and is down-converted in quadrature (I/Q) to the intermediate frequency (IF). At IF, the I/Q signals are digitized by the high dynamic-range ADCs.

An advanced automatic gain control (AGC) unit adjusts the front-end gain, and enables the CC1121 device to receive strong and weak signals, even in the presence of strong interferers. High-attenuation channels and data filtering enable reception with strong neighbor channel interferers. The I/Q signal is converted to a phase and magnitude signal to support both FSK and OOK modulation schemes.

NOTE

A unique I/Q compensation algorithm removes any problem of I/Q mismatch, thus avoiding time consuming and costly I/Q image calibration steps.

5.4 Transmitter

The CC1121 transmitter is based on direct synthesis of the RF frequency (in-loop modulation). To use the spectrum effectively, the CC1121 device has extensive data filtering and shaping in TX mode to support high throughput data communication in narrowband channels. The modulator also controls power ramping to remove issues such as spectral splattering when driving external high-power RF amplifiers.

5.5 Radio Control and User Interface

The CC1121 digital control system is built around the main radio control (MARC), which is implemented using an internal high-performance, 16-bit ultra-low-power processor. MARC handles power modes, radio sequencing and protocol timing.

A 4-wire SPI serial interface is used for configuration and data buffer access. The digital baseband includes support for channel configuration, packet handling, and data buffering. The host MCU can stay in power-down mode until a valid RF packet is received. This greatly reduces power consumption. When the host MCU receives a valid RF packet, it burst-reads the data. This reduces the required computing power.

The CC1121 radio control and user interface are based on the widely used the CC1101 transceiver. This relationship enables an easy transition between the two platforms. The command strobes and the main radio states are the same for the two platforms.

For legacy formats, the CC1121 device also supports two serial modes:

- Synchronous serial mode: The CC1121 device performs bit synchronization and provides the MCU with a bit clock with associated data.
- Transparent mode: The CC1121 outputs the digital baseband signal using a digital interpolation filter to eliminate jitter introduced by digital filtering and demodulation.

5.6 Enhanced Wake-On-Radio (eWOR)

eWOR, using a flexible integrated sleep timer, enables automatic receiver polling with no intervention from the MCU. The CC1121 device enters RX mode, it listens and then returns to sleep if a valid RF packet is not received. The sleep interval and duty cycle can be configured to make a trade-off between network latency and power consumption. Incoming messages are time-stamped to simplify timer re-synchronization.

The eWOR timer runs off an ultra-low-power 32-kHz RC oscillator. To improve timing accuracy, the RC oscillator can be automatically calibrated to the RF crystal in configurable intervals.

Copyright © 2011–2014, Texas Instruments Incorporated

5.7 Sniff Mode

The CC1121 device supports very quick start up times, and requires very few preamble bits. Sniff mode uses these conditions to dramatically reduce the current consumption while the receiver is waiting for data.

Because the CC1121 can wake up and settle much faster than the duration of most preambles, it is not required to be in RX mode continuously while waiting for a packet to arrive. Instead, the enhanced Wake-On-Radio feature can be used to put the device into sleep periodically. By setting an appropriate sleep time, the CC1121 device can wake up and receive the packet when it arrives with no performance loss. This sequence removes the need for accurate timing synchronization between transmitter and receiver, and lets the user to trade off current consumption between the transmitter and receiver.

For more information, see the sniff mode design note (SWRA428).

5.8 Antenna Diversity

Antenna diversity can increase performance in a multipath environment. An external antenna switch is required. The CC1121 device uses one of the GPIO pins to automatically control the switch. The device also supports differential output control signals typically used in RF switches.

If antenna diversity is enabled, the GPIO alternates between high and low states until a valid RF input signal is detected. An optional acknowledge packet can be transmitted without changing the state of the GPIO.

An incoming RF signal can be validated by received signal strength or by using the automatic preamble detector. Using the automatic preamble detector ensures a more robust system and avoids the need to set a defined signal strength threshold (such a threshold sets the sensitivity limit of the system).

5.9 Low-Power and High-Performance Mode

The CC1121 device is highly configurable, enabling trade-offs between power and performance based on the needs of the application. This data sheet describes two modes: low-power mode and high-performance mode. These modes represent configurations where the device is optimized for either power or performance.

Copyright © 2011–2014, Texas Instruments Incorporated

5.10 WaveMatch

Advanced capture logic locks onto the synchronization word and does not require preamble settling bytes. Therefore, receiver settling time is reduced to the settling time of the AGC, typically 4 bits.

The WaveMatch feature also greatly reduces false sync triggering on noise, further reducing the power consumption and improving sensitivity and reliability. The same logic can also be used as a high-performance preamble detector to reliably detect a valid preamble in the channel.

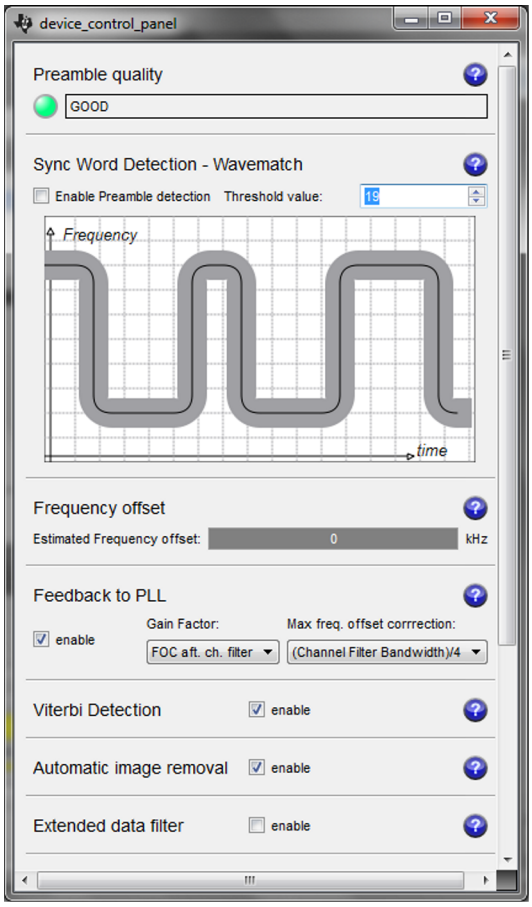

See SWRC046 for more information.

Figure 5-2. Receiver Configurator in SmartRF™ Studio

6 Typical Application Circuit

NOTE

This section is intended only as an introduction.

Very few external components are required for the operation of the CC1121 device. Figure 6-1 shows a typical application circuit. The board layout will greatly influence the RF performance of the CC1121 device. Figure 6-1 does not show decoupling capacitors for power pins.

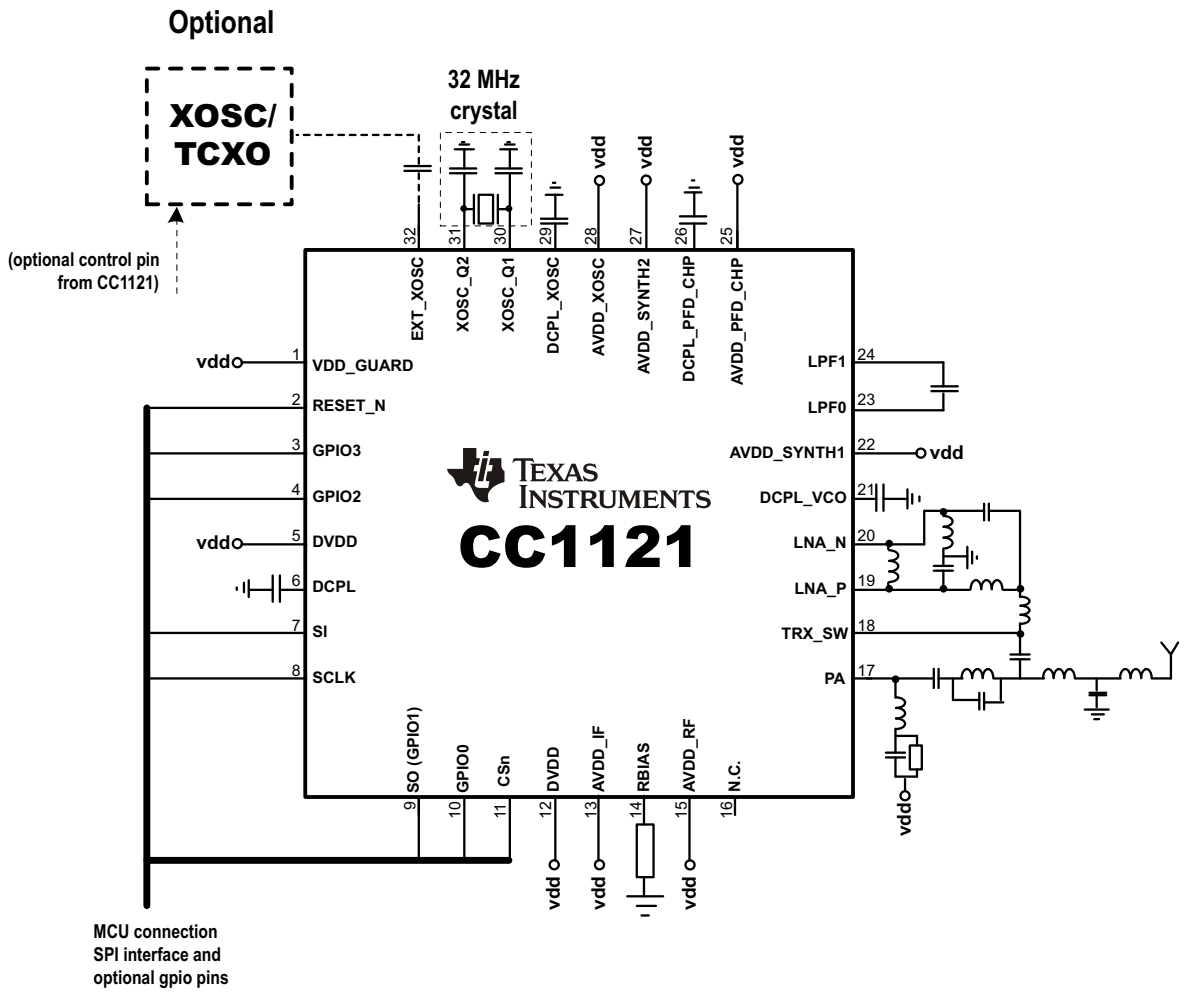

Figure 6-1. Typical Application Circuit

For more information, see the reference designs available for the CC1121 device in Section 7.2, *Documentation Support*.

Copyright © 2011–2014, Texas Instruments Incorporated

7 Device and Documentation Support

7.1 Device Support

7.1.1 Development Support

7.1.1.1 Configuration Software

The CC1121 device can be configured using the SmartRF Studio software (SWRC046). The SmartRF Studio software is highly recommended for obtaining optimum register settings, and for evaluating performance and functionality.

7.1.2 Device and Development-Support Tool Nomenclature

To designate the stages in the product development cycle, TI assigns prefixes to the part numbers of all microprocessors (MPUs) and support tools. Each device has one of three prefixes: X, P, or null (no prefix) (for example, CC1121). Texas Instruments recommends two of three possible prefix designators for its support tools: TMDX and TMDS. These prefixes represent evolutionary stages of product development from engineering prototypes (TMDX) through fully qualified production devices and tools (TMDS).

Device development evolutionary flow:

X Experimental device that is not necessarily representative of the final device's electrical specifications and may not use production assembly flow.

P Prototype device that is not necessarily the final silicon die and may not necessarily meet final electrical specifications.

null Production version of the silicon die that is fully qualified.

Support tool development evolutionary flow:

TMDX Development-support product that has not yet completed Texas Instruments internal qualification testing.

TMDS Fully qualified development-support product.

X and P devices and TMDX development-support tools are shipped against the following disclaimer:

"Developmental product is intended for internal evaluation purposes."

Production devices and TMDS development-support tools have been characterized fully, and the quality and reliability of the device have been demonstrated fully. TI's standard warranty applies.

Predictions show that prototype devices (X or P) have a greater failure rate than the standard production devices. Texas Instruments recommends that these devices not be used in any production system because their expected end-use failure rate still is undefined. Only qualified production devices are to be used.

TI device nomenclature also includes a suffix with the device family name. This suffix indicates the package type (for example, RHB) and the temperature range (for example, blank is the default commercial temperature range) provides a legend for reading the complete device name for any CC1121 device.

For orderable part numbers of CC1121 devices in the QFN package types, see the Package Option Addendum of this document, the TI website (www.ti.com), or contact your TI sales representative.

7.2 Documentation Support

The following documents supplement the CC1121 processor. Copies of these documents are available on the Internet at www.ti.com. *Tip:* Enter the literature number in the search box provided at www.ti.com.

SWRR106 CC112x IPC 868- and 915-MHz 2-layer Reference Design

SWRR107 CC112x IPC 868- and 915-MHz 4-layer Reference Design

SWRC221 CC1120EM 420- to 470-MHz Reference Design

SWRC224 CC1121EM 868- to 915-MHz Reference Design

SWRC223 CC1120EM 955-MHz Reference Design

SWRC046 SmartRF Studio Software

SWRA428 CC112x/CC120x Sniff Mode Application Note

7.3 Community Resources

The following links connect to TI community resources. Linked contents are provided "AS IS" by the respective contributors. They do not constitute TI specifications and do not necessarily reflect TI's views; see TI's Terms of Use.

TI E2E™ Online Community ***TI's Engineer-to-Engineer (E2E) Community.*** Created to foster collaboration among engineers. At e2e.ti.com, you can ask questions, share knowledge, explore ideas and help solve problems with fellow engineers.

TI Embedded Processors Wiki ***Texas Instruments Embedded Processors Wiki.*** Established to help developers get started with Embedded Processors from Texas Instruments and to foster innovation and growth of general knowledge about the hardware and software surrounding these devices.

7.4 Trademarks

SmartRF, E2E are trademarks of Texas Instruments.

7.5 Electrostatic Discharge Caution

This integrated circuit can be damaged by ESD. Texas Instruments recommends that all integrated circuits be handled with appropriate precautions. Failure to observe proper handling and installation procedures can cause damage.

ESD damage can range from subtle performance degradation to complete device failure. Precision integrated circuits may be more susceptible to damage because very small parametric changes could cause the device not to meet its published specifications.

7.6 Glossary

SLYZ022 — *TI Glossary*.

This glossary lists and explains terms, acronyms, and definitions.

Copyright © 2011–2014, Texas Instruments Incorporated

8 Mechanical Packaging and Orderable Information

The following pages include mechanical packaging and orderable information. This information is the most current data available for the designated devices. This data is subject to change without notice and revision of this document. For browser-based versions of this data sheet, refer to the left-hand navigation.

PACKAGING INFORMATION

Orderable Device	Status (1)	Package Type	Package Drawing	Pins	Package Qty	Eco Plan (2)	Lead/Ball Finish (6)	MSL Peak Temp (3)	Op Temp (°C)	Device Marking (4/5)	Samples
CC1121RHBR	ACTIVE	VQFN	RHB	32	3000	Green (RoHS & no Sb/Br)	CU NIPDAU | Call TI	Level-3-260C-168 HR	-40 to 85	CC1121	Samples
CC1121RHBT	ACTIVE	VQFN	RHB	32	250	Green (RoHS & no Sb/Br)	CU NIPDAU | Call TI	Level-3-260C-168 HR	-40 to 85	CC1121	Samples
CC1121RHMR	OBSOLETE	VQFN	RHM	32		TBD	Call TI	Call TI	-40 to 85	CC1121	
CC1121RHMT	OBSOLETE	VQFN	RHM	32		TBD	Call TI	Call TI	-40 to 85	CC1121	

(1) The marketing status values are defined as follows:
ACTIVE: Product device recommended for new designs.
LIFEBUY: TI has announced that the device will be discontinued, and a lifetime-buy period is in effect.
NRND: Not recommended for new designs. Device is in production to support existing customers, but TI does not recommend using this part in a new design.
PREVIEW: Device has been announced but is not in production. Samples may or may not be available.
OBSOLETE: TI has discontinued the production of the device.

(2) Eco Plan - The planned eco-friendly classification: Pb-Free (RoHS), Pb-Free (RoHS Exempt), or Green (RoHS & no Sb/Br) - please check http://www.ti.com/productcontent for the latest availability information and additional product content details.
TBD: The Pb-Free/Green conversion plan has not been defined.
Pb-Free (RoHS): TI's terms "Lead-Free" or "Pb-Free" mean semiconductor products that are compatible with the current RoHS requirements for all 6 substances, including the requirement that lead not exceed 0.1% by weight in homogeneous materials. Where designed to be soldered at high temperatures, TI Pb-Free products are suitable for use in specified lead-free processes.
Pb-Free (RoHS Exempt): This component has a RoHS exemption for either 1) lead-based flip-chip solder bumps used between the die and package, or 2) lead-based die adhesive used between the die and leadframe. The component is otherwise considered Pb-Free (RoHS compatible) as defined above.
Green (RoHS & no Sb/Br): TI defines "Green" to mean Pb-Free (RoHS compatible), and free of Bromine (Br) and Antimony (Sb) based flame retardants (Br or Sb do not exceed 0.1% by weight in homogeneous material)

(3) MSL, Peak Temp. - The Moisture Sensitivity Level rating according to the JEDEC industry standard classifications, and peak solder temperature.

(4) There may be additional marking, which relates to the logo, the lot trace code information, or the environmental category on the device.

(5) Multiple Device Markings will be inside parentheses. Only one Device Marking contained in parentheses and separated by a "~" will appear on a device. If a line is indented then it is a continuation of the previous line and the two combined represent the entire Device Marking for that device.

(6) Lead/Ball Finish - Orderable Devices may have multiple material finish options. Finish options are separated by a vertical ruled line. Lead/Ball Finish values may wrap to two lines if the finish value exceeds the maximum column width.

Important Information and Disclaimer: The information provided on this page represents TI's knowledge and belief as of the date that it is provided. TI bases its knowledge and belief on information provided by third parties, and makes no representation or warranty as to the accuracy of such information. Efforts are underway to better integrate information from third parties. TI has taken and

continues to take reasonable steps to provide representative and accurate information but may not have conducted destructive testing or chemical analysis on incoming materials and chemicals.
TI and TI suppliers consider certain information to be proprietary, and thus CAS numbers and other limited information may not be available for release.

In no event shall TI's liability arising out of such information exceed the total purchase price of the TI part(s) at issue in this document sold by TI to Customer on an annual basis.

TAPE AND REEL INFORMATION

REEL DIMENSIONS

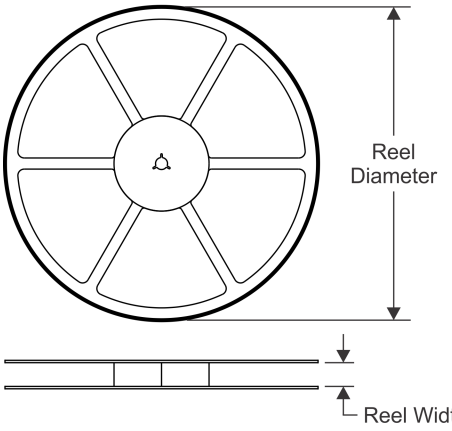

TAPE DIMENSIONS

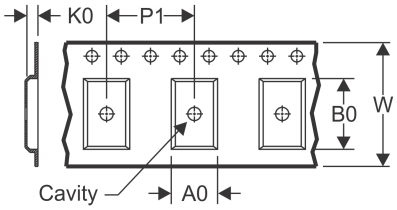

A0	Dimension designed to accommodate the component width
B0	Dimension designed to accommodate the component length
K0	Dimension designed to accommodate the component thickness
W	Overall width of the carrier tape
P1	Pitch between successive cavity centers

QUADRANT ASSIGNMENTS FOR PIN 1 ORIENTATION IN TAPE

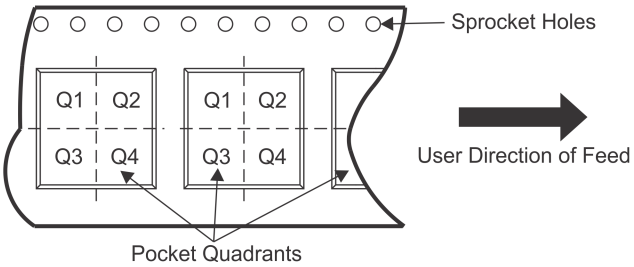

*All dimensions are nominal

Device	Package Type	Package Drawing	Pins	SPQ	Reel Diameter (mm)	Reel Width W1 (mm)	A0 (mm)	B0 (mm)	K0 (mm)	P1 (mm)	W (mm)	Pin1 Quadrant
CC1121RHBR	VQFN	RHB	32	3000	330.0	12.4	5.3	5.3	1.5	8.0	12.0	Q2
CC1121RHBT	VQFN	RHB	32	250	180.0	12.4	5.3	5.3	1.5	8.0	12.0	Q2

TAPE AND REEL BOX DIMENSIONS

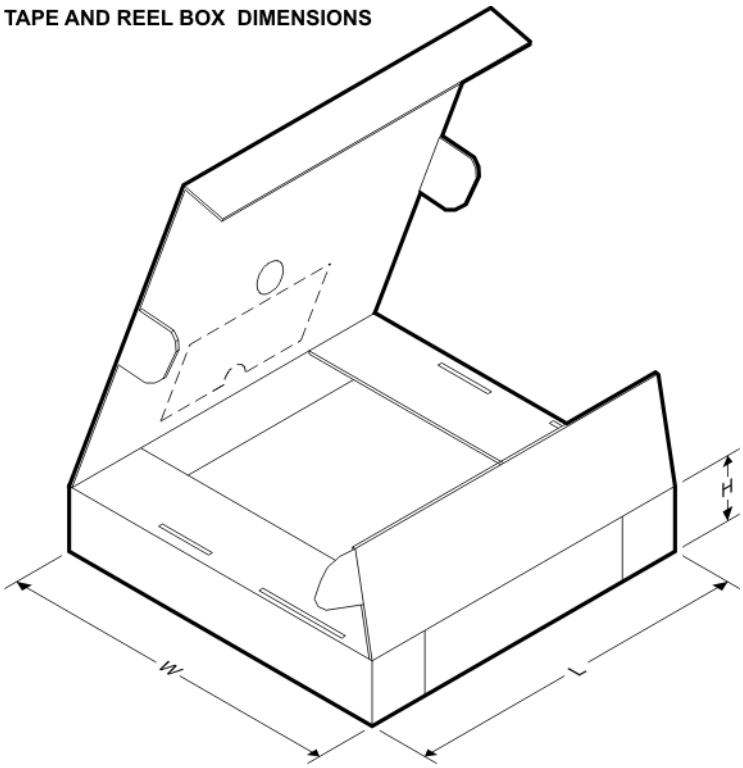

*All dimensions are nominal

Device	Package Type	Package Drawing	Pins	SPQ	Length (mm)	Width (mm)	Height (mm)
CC1121RHBR	VQFN	RHB	32	3000	336.6	336.6	28.6
CC1121RHBT	VQFN	RHB	32	250	210.0	185.0	35.0

RHB (S–PVQFN–N32) PLASTIC QUAD FLATPACK NO–LEAD

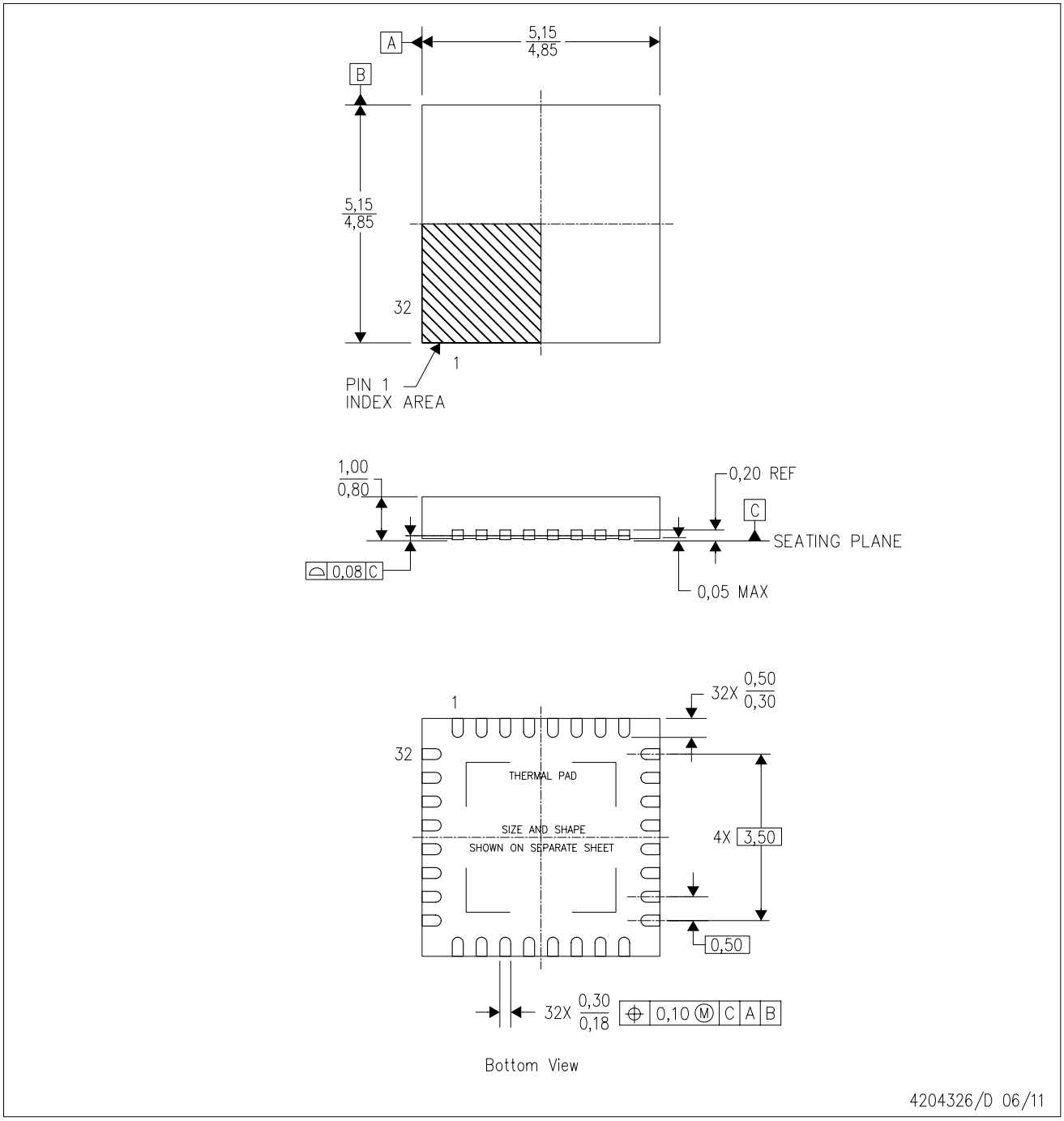

NOTES:
A. All linear dimensions are in millimeters. Dimensioning and tolerancing per ASME Y14.5M–1994.
B. This drawing is subject to change without notice.
C. QFN (Quad Flatpack No–Lead) Package configuration.
D. The package thermal pad must be soldered to the board for thermal and mechanical performance.
E. See the additional figure in the Product Data Sheet for details regarding the exposed thermal pad features and dimensions.
F. Falls within JEDEC MO–220.

RHB (S–PVQFN–N32) PLASTIC QUAD FLATPACK NO–LEAD

THERMAL INFORMATION

This package incorporates an exposed thermal pad that is designed to be attached directly to an external heatsink. The thermal pad must be soldered directly to the printed circuit board (PCB). After soldering, the PCB can be used as a heatsink. In addition, through the use of thermal vias, the thermal pad can be attached directly to the appropriate copper plane shown in the electrical schematic for the device, or alternatively, can be attached to a special heatsink structure designed into the PCB. This design optimizes the heat transfer from the integrated circuit (IC).

For information on the Quad Flatpack No–Lead (QFN) package and its advantages, refer to Application Report, QFN/SON PCB Attachment, Texas Instruments Literature No. SLUA271. This document is available at www.ti.com.

The exposed thermal pad dimensions for this package are shown in the following illustration.

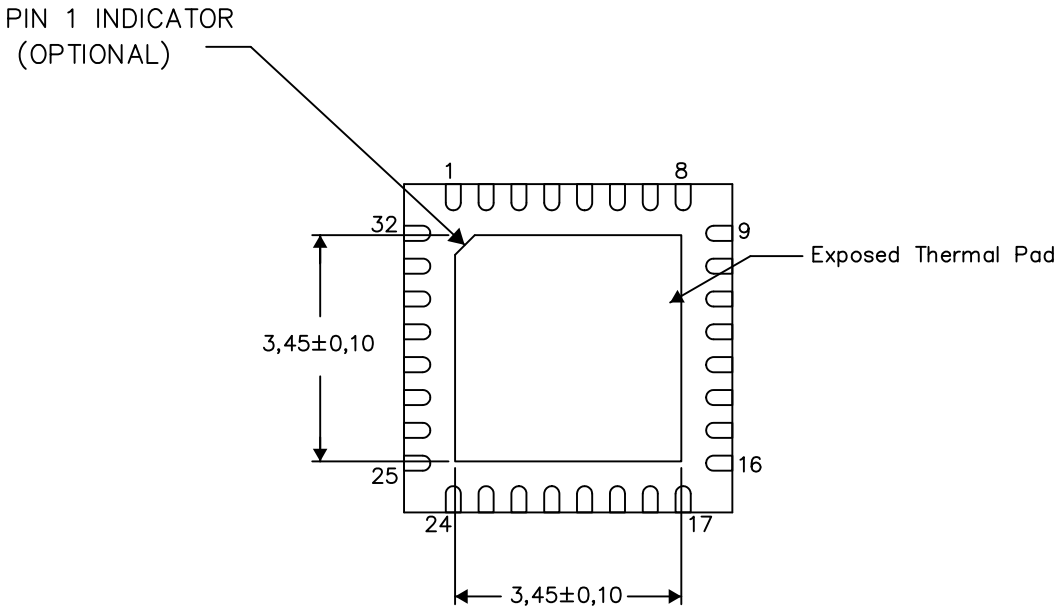

Bottom View

Exposed Thermal Pad Dimensions

4206356–2/AC 05/15

NOTE: A. All linear dimensions are in millimeters

RHB (S–PVQFN–N32) PLASTIC QUAD FLATPACK NO–LEAD

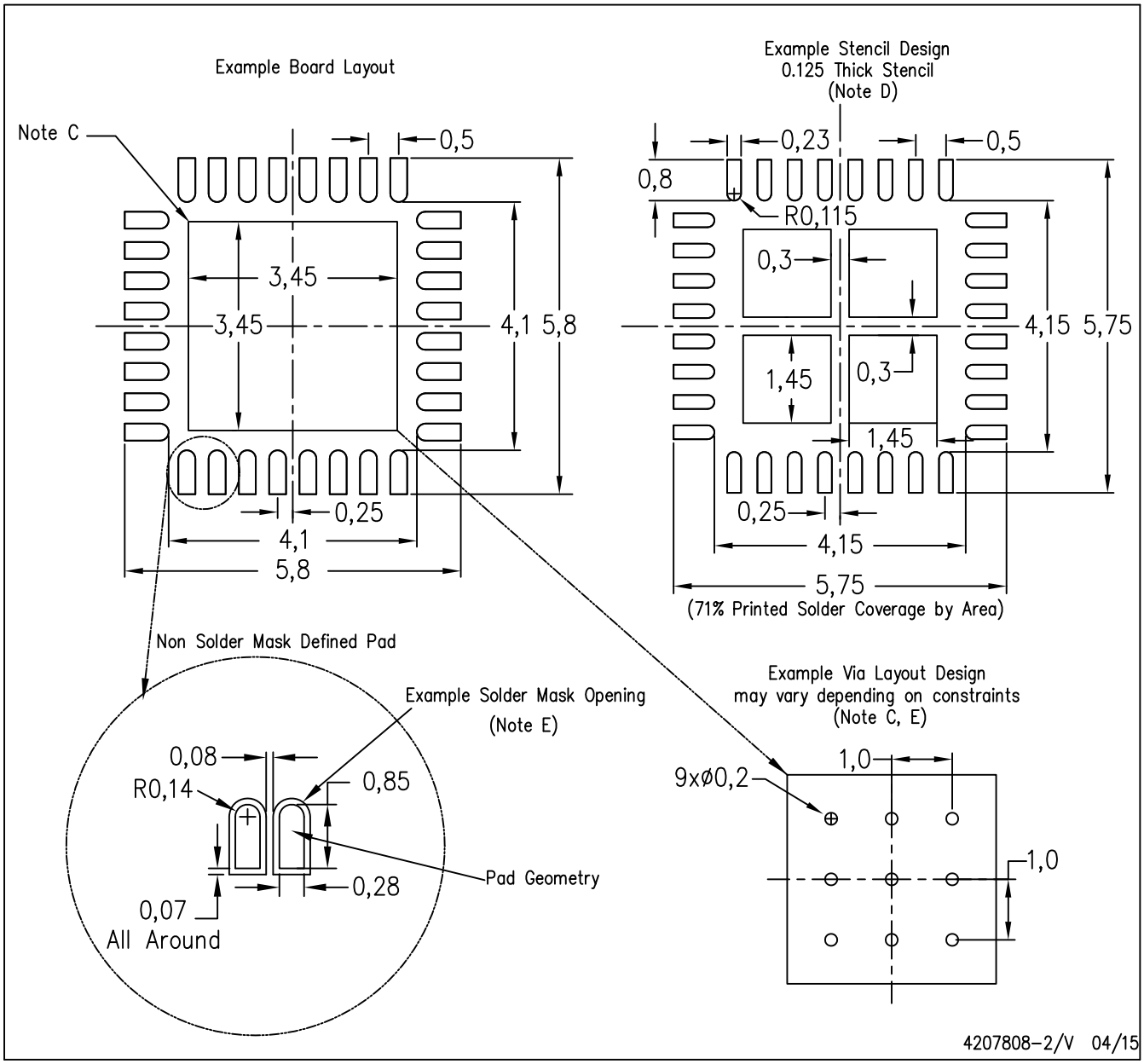

NOTES:
A. All linear dimensions are in millimeters.
B. This drawing is subject to change without notice.
C. This package is designed to be soldered to a thermal pad on the board. Refer to Application Note, Quad Flat–Pack Packages, Texas Instruments Literature No. SLUA271, and also the Product Data Sheets for specific thermal information, via requirements, and recommended board layout. These documents are available at www.ti.com <http://www.ti.com>.
D. Laser cutting apertures with trapezoidal walls and also rounding corners will offer better paste release. Customers should contact their board assembly site for stencil design recommendations. Refer to IPC 7525 for stencil design considerations.
E. Customers should contact their board fabrication site for recommended solder mask tolerances and via tenting recommendations for any larger diameter vias placed in the thermal pad.

RHM (S-PVQFN-N32) PLASTIC QUAD FLATPACK NO-LEAD

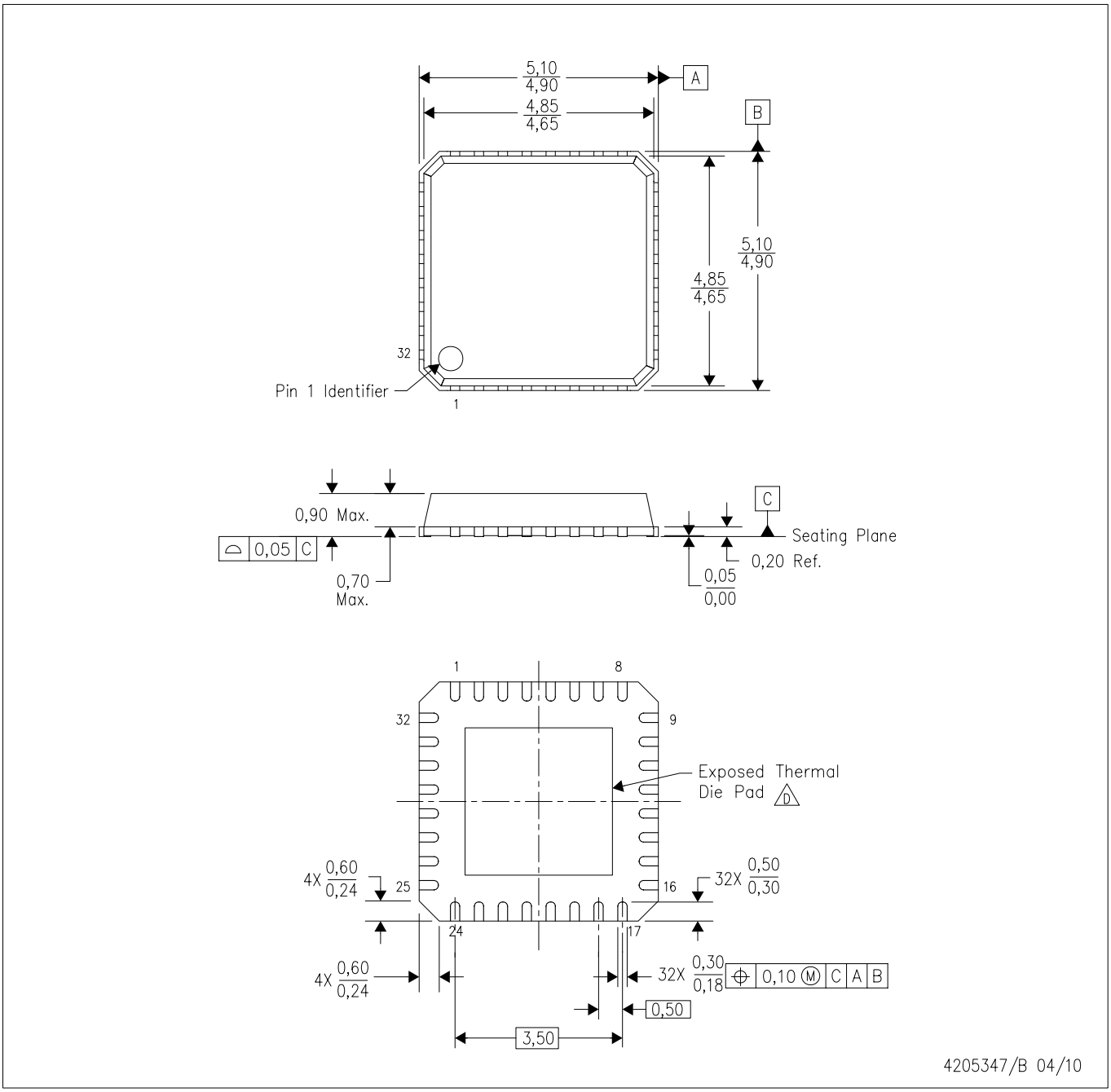

NOTES:
A. All linear dimensions are in millimeters. Dimensioning and tolerancing per ASME Y14.5M-1994.
B. This drawing is subject to change without notice.
C. QFN (Quad Flatpack No-Lead) Package configuration.
D. The package thermal pad must be soldered to the board for thermal and mechanical performance. See the Product Data Sheet for details regarding the exposed thermal pad dimensions.

IMPORTANT NOTICE

Texas Instruments Incorporated and its subsidiaries (TI) reserve the right to make corrections, enhancements, improvements and other changes to its semiconductor products and services per JESD46, latest issue, and to discontinue any product or service per JESD48, latest issue. Buyers should obtain the latest relevant information before placing orders and should verify that such information is current and complete. All semiconductor products (also referred to herein as “components”) are sold subject to TI’s terms and conditions of sale supplied at the time of order acknowledgment.

TI warrants performance of its components to the specifications applicable at the time of sale, in accordance with the warranty in TI’s terms and conditions of sale of semiconductor products. Testing and other quality control techniques are used to the extent TI deems necessary to support this warranty. Except where mandated by applicable law, testing of all parameters of each component is not necessarily performed.

TI assumes no liability for applications assistance or the design of Buyers’ products. Buyers are responsible for their products and applications using TI components. To minimize the risks associated with Buyers’ products and applications, Buyers should provide adequate design and operating safeguards.

TI does not warrant or represent that any license, either express or implied, is granted under any patent right, copyright, mask work right, or other intellectual property right relating to any combination, machine, or process in which TI components or services are used. Information published by TI regarding third-party products or services does not constitute a license to use such products or services or a warranty or endorsement thereof. Use of such information may require a license from a third party under the patents or other intellectual property of the third party, or a license from TI under the patents or other intellectual property of TI.

Reproduction of significant portions of TI information in TI data books or data sheets is permissible only if reproduction is without alteration and is accompanied by all associated warranties, conditions, limitations, and notices. TI is not responsible or liable for such altered documentation. Information of third parties may be subject to additional restrictions.

Resale of TI components or services with statements different from or beyond the parameters stated by TI for that component or service voids all express and any implied warranties for the associated TI component or service and is an unfair and deceptive business practice. TI is not responsible or liable for any such statements.

Buyer acknowledges and agrees that it is solely responsible for compliance with all legal, regulatory and safety-related requirements concerning its products, and any use of TI components in its applications, notwithstanding any applications-related information or support that may be provided by TI. Buyer represents and agrees that it has all the necessary expertise to create and implement safeguards which anticipate dangerous consequences of failures, monitor failures and their consequences, lessen the likelihood of failures that might cause harm and take appropriate remedial actions. Buyer will fully indemnify TI and its representatives against any damages arising out of the use of any TI components in safety-critical applications.

In some cases, TI components may be promoted specifically to facilitate safety-related applications. With such components, TI’s goal is to help enable customers to design and create their own end-product solutions that meet applicable functional safety standards and requirements. Nonetheless, such components are subject to these terms.

No TI components are authorized for use in FDA Class III (or similar life-critical medical equipment) unless authorized officers of the parties have executed a special agreement specifically governing such use.

Only those TI components which TI has specifically designated as military grade or “enhanced plastic” are designed and intended for use in military/aerospace applications or environments. Buyer acknowledges and agrees that any military or aerospace use of TI components which have ***not*** been so designated is solely at the Buyer's risk, and that Buyer is solely responsible for compliance with all legal and regulatory requirements in connection with such use.

TI has specifically designated certain components as meeting ISO/TS16949 requirements, mainly for automotive use. In any case of use of non-designated products, TI will not be responsible for any failure to meet ISO/TS16949.

Products		**Applications**	
Audio	www.ti.com/audio	Automotive and Transportation	www.ti.com/automotive
Amplifiers	amplifier.ti.com	Communications and Telecom	www.ti.com/communications
Data Converters	dataconverter.ti.com	Computers and Peripherals	www.ti.com/computers
DLP® Products	www.dlp.com	Consumer Electronics	www.ti.com/consumer-apps
DSP	dsp.ti.com	Energy and Lighting	www.ti.com/energy
Clocks and Timers	www.ti.com/clocks	Industrial	www.ti.com/industrial
Interface	interface.ti.com	Medical	www.ti.com/medical
Logic	logic.ti.com	Security	www.ti.com/security
Power Mgmt	power.ti.com	Space, Avionics and Defense	www.ti.com/space-avionics-defense
Microcontrollers	microcontroller.ti.com	Video and Imaging	www.ti.com/video
RFID	www.ti-rfid.com		
OMAP Applications Processors	www.ti.com/omap	**TI E2E Community**	e2e.ti.com
Wireless Connectivity	www.ti.com/wirelessconnectivity		

Mailing Address: Texas Instruments, Post Office Box 655303, Dallas, Texas 75265
Copyright © 2016, Texas Instruments Incorporated